ENGLISH IP20

Specification of installation

In order to ensure safety use, please notice the following items:

- Read and understand the whole Specification.
- Suitable for the use of 220-240V and 50-60Hz.
- Must be installeed on the fixed places and be checked annually
- Please wear gloves as installment and avoid rot on the surface of plaetng.
- Please tum off the lighitng source by soft cloth as cleaning prohibited to use of rotted detergent.
- Please connect with the local sales service center when there are any abnomality.

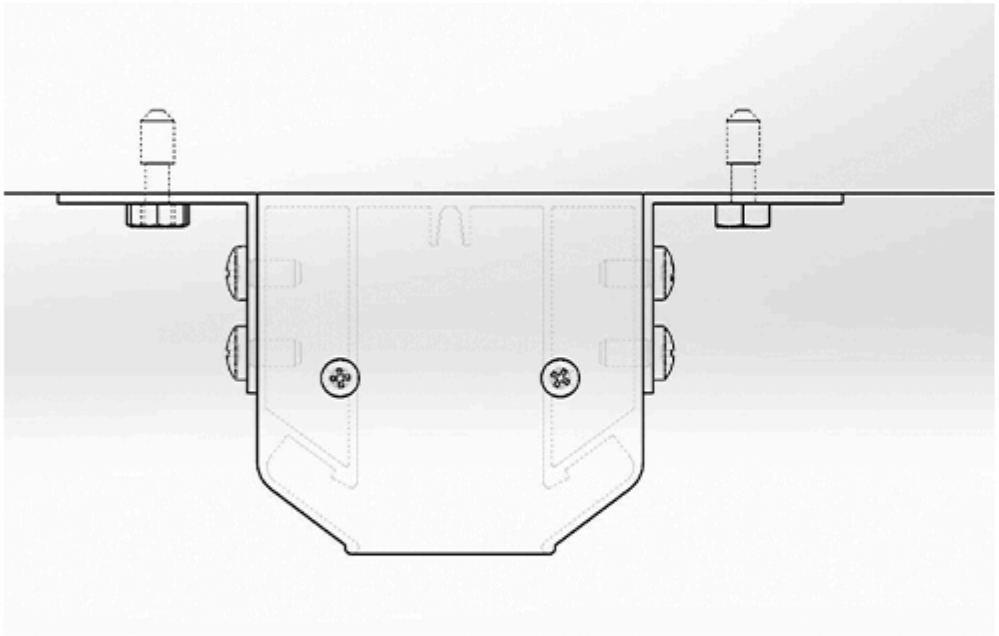

FIXTURE SIZE:

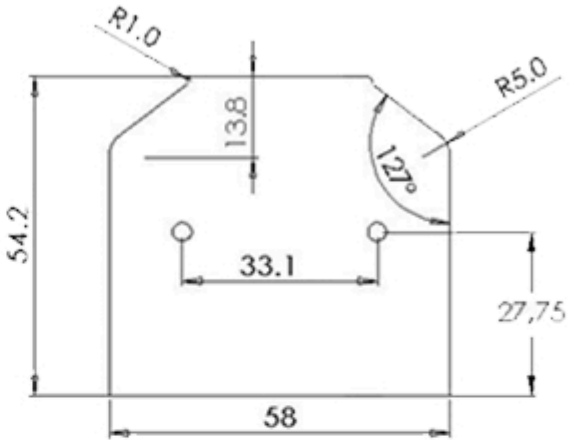

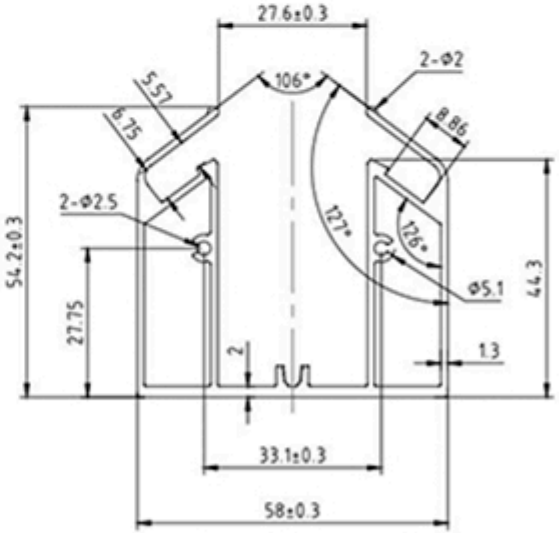

Product coding: CLT 0.223 05 3000